2 DRAWING 49.0274.01

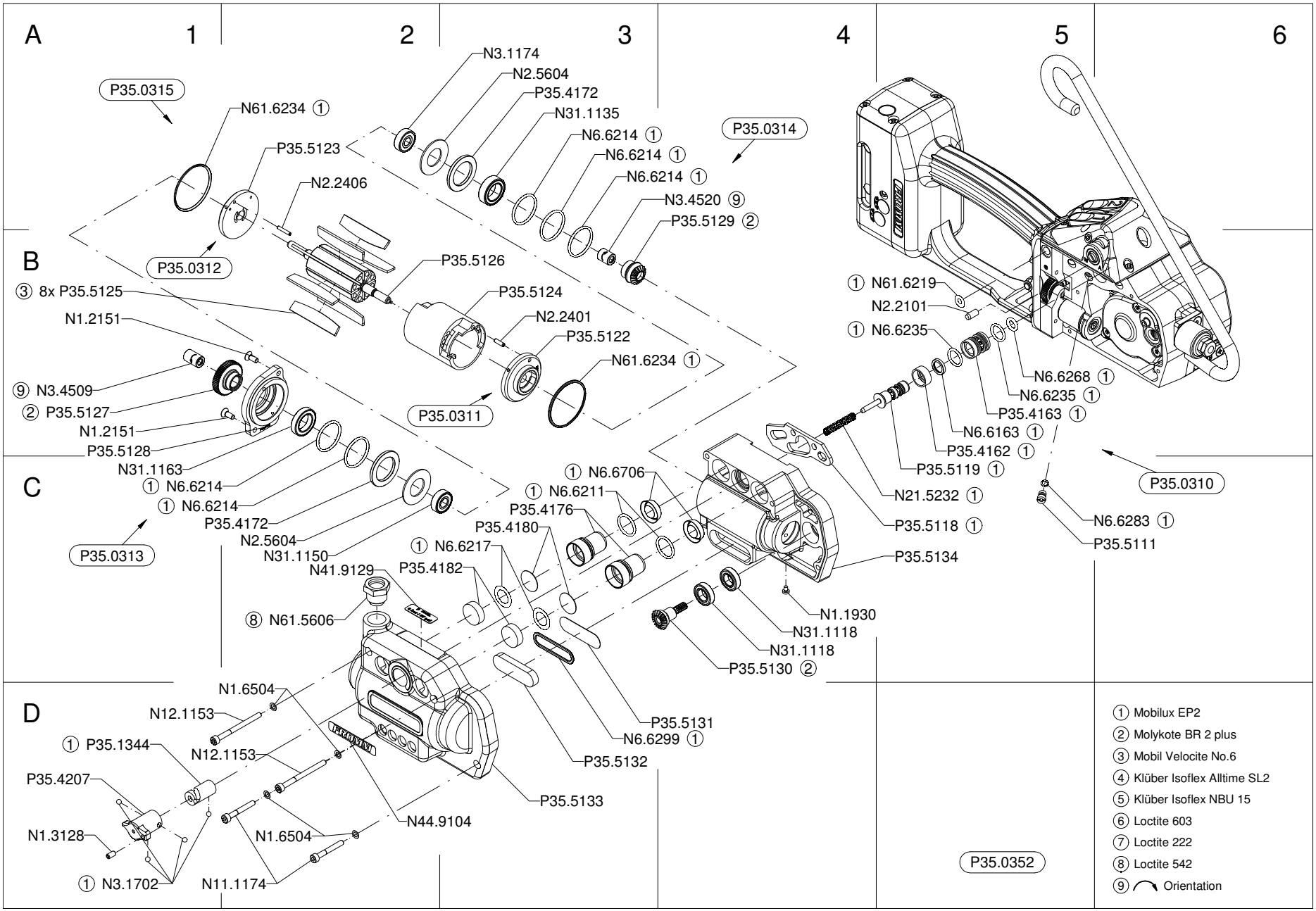

© 2018 FROMM Holding AG
All rights reserved. Reproduction and duplication - also in extracts - are not permitted.

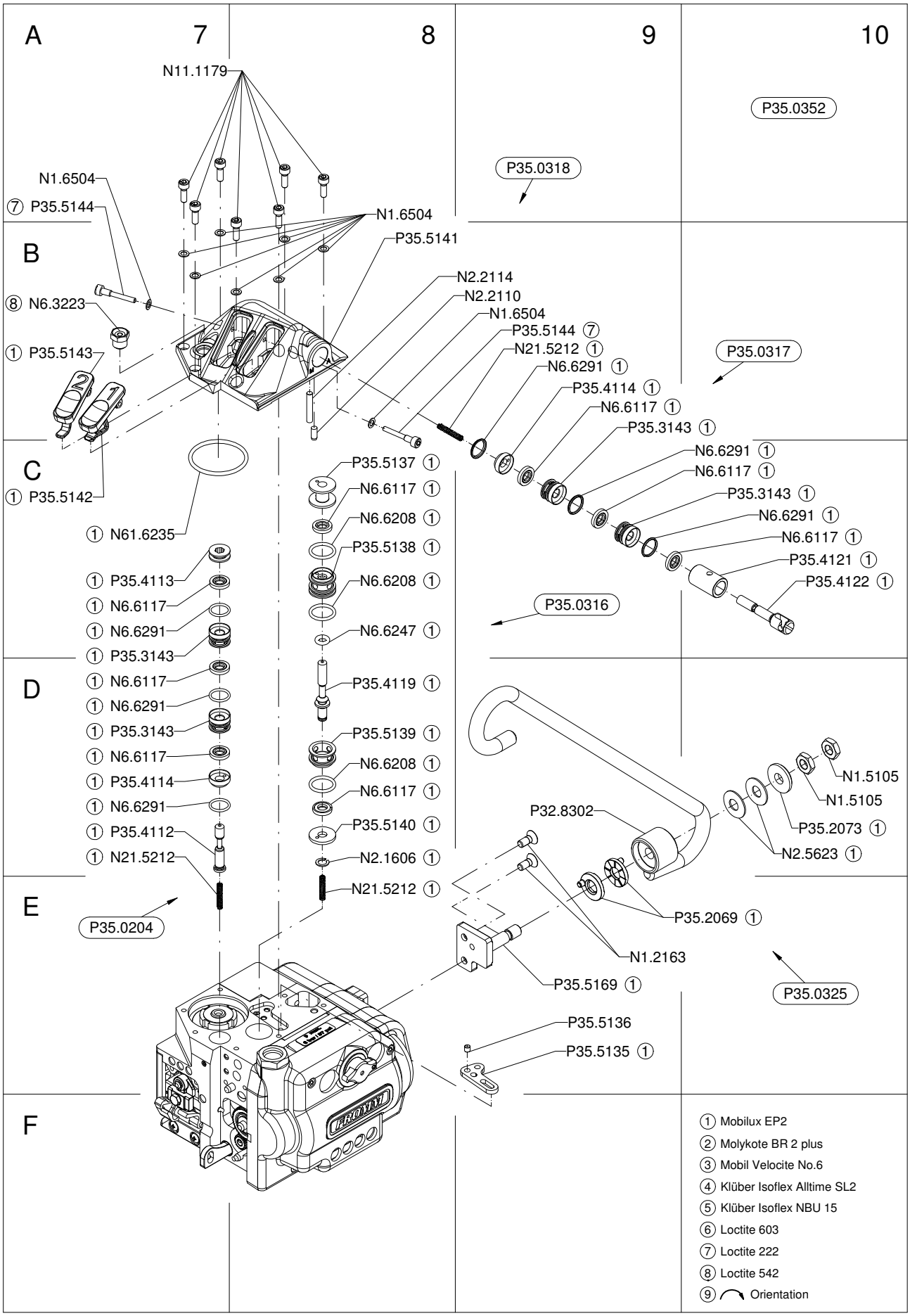

© 2018 FROMM Holding AG
All rights reserved. Reproduction and duplication - also in extracts - are not permitted.

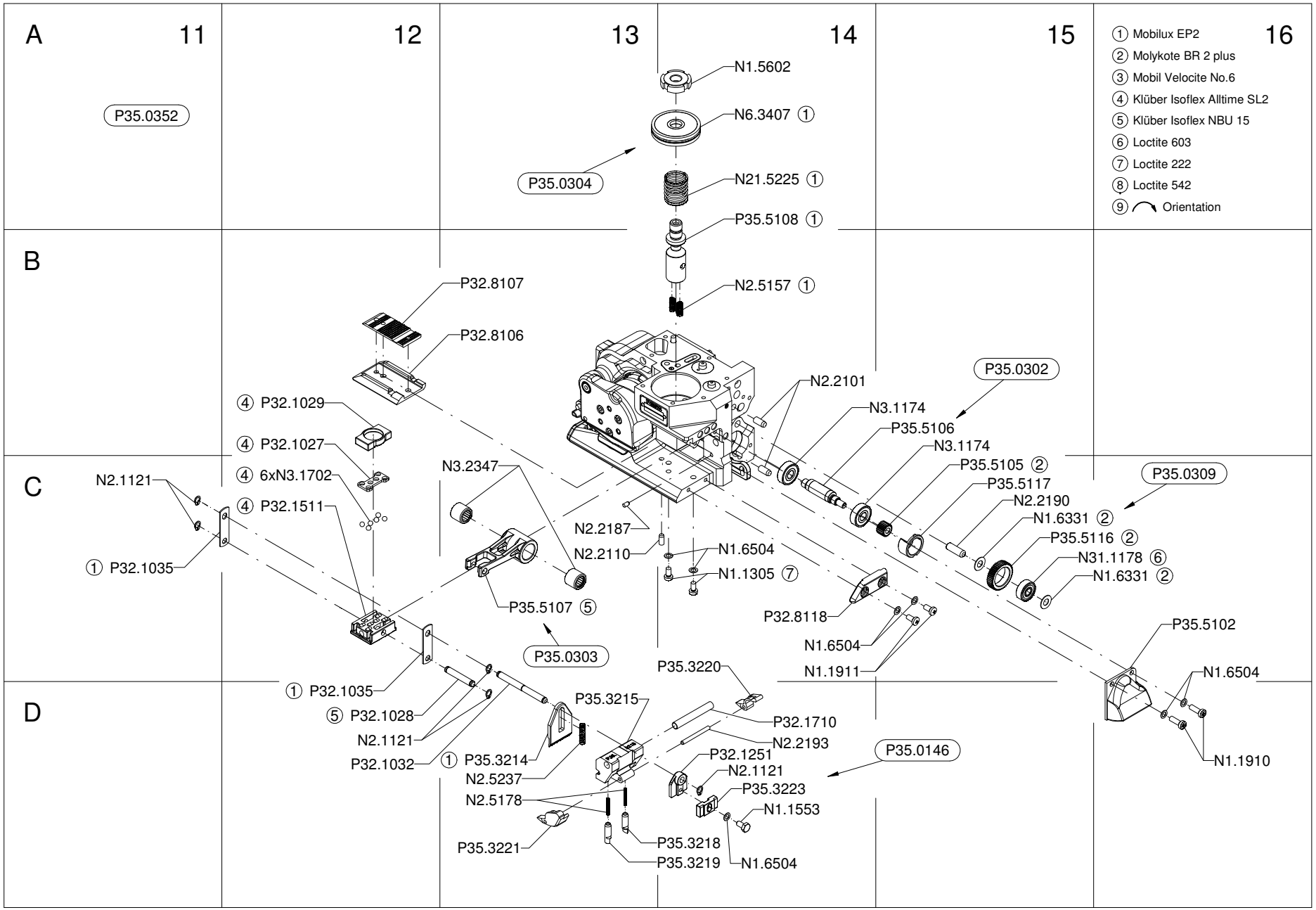

© 2018 FROMM Holding AG
All rights reserved. Reproduction and duplication - also in extracts - are not permitted.

FROMM

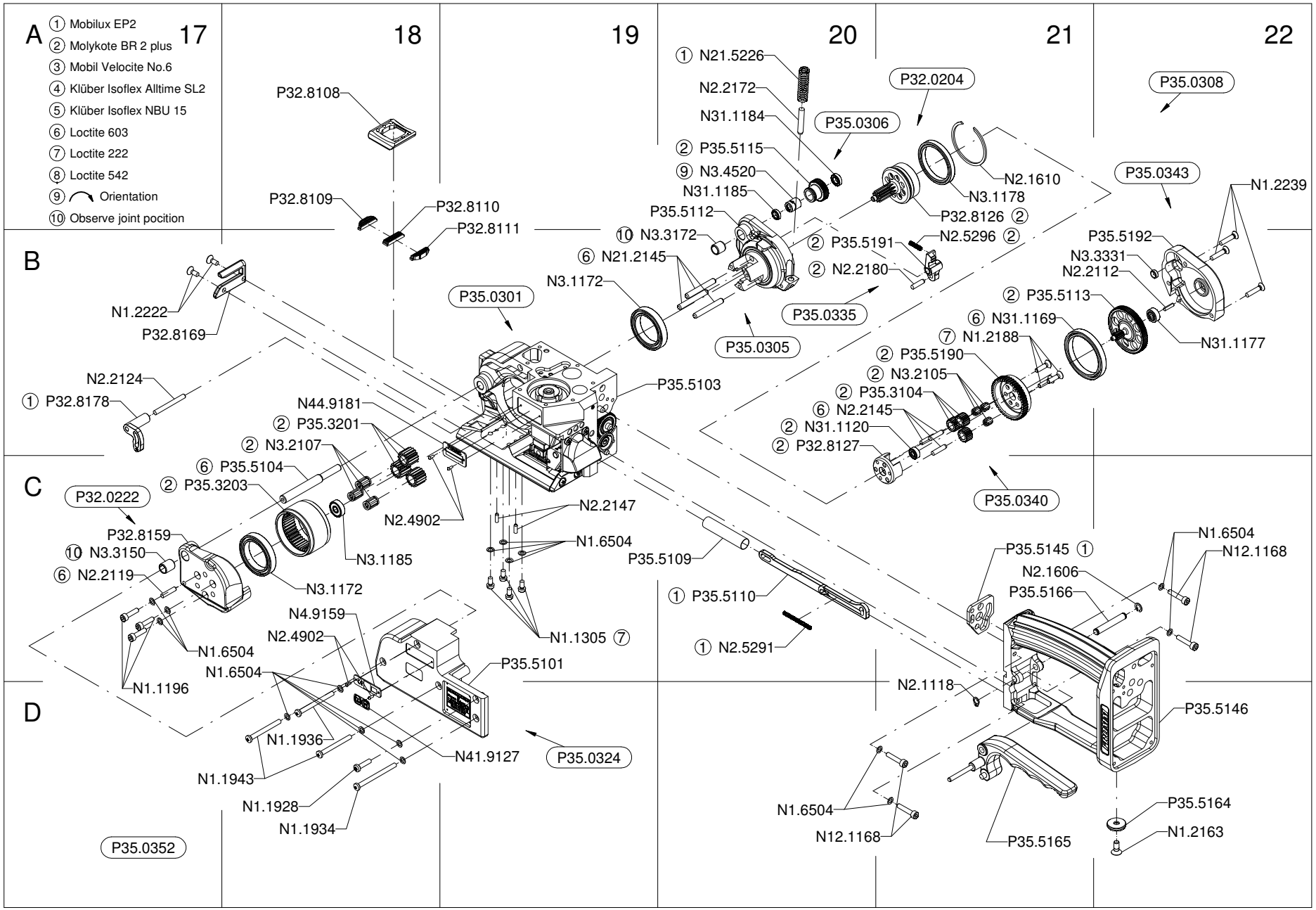

© 2018 FROMM Holding AG
All rights reserved. Reproduction and duplication - also in extracts - are not permitted.

FROMM

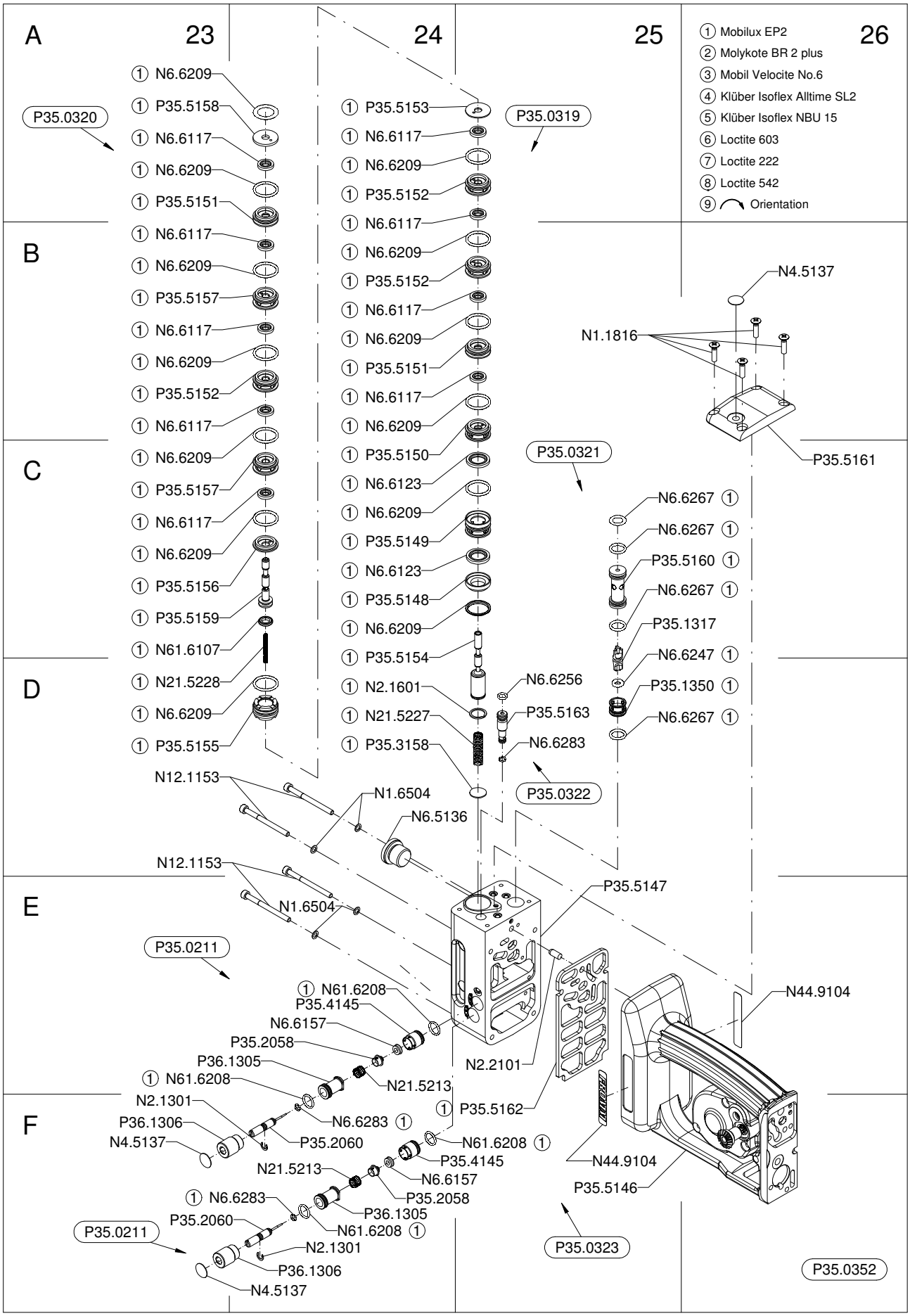

© 2018 FROMM Holding AG
All rights reserved. Reproduction and duplication - also in extracts - are not permitted.