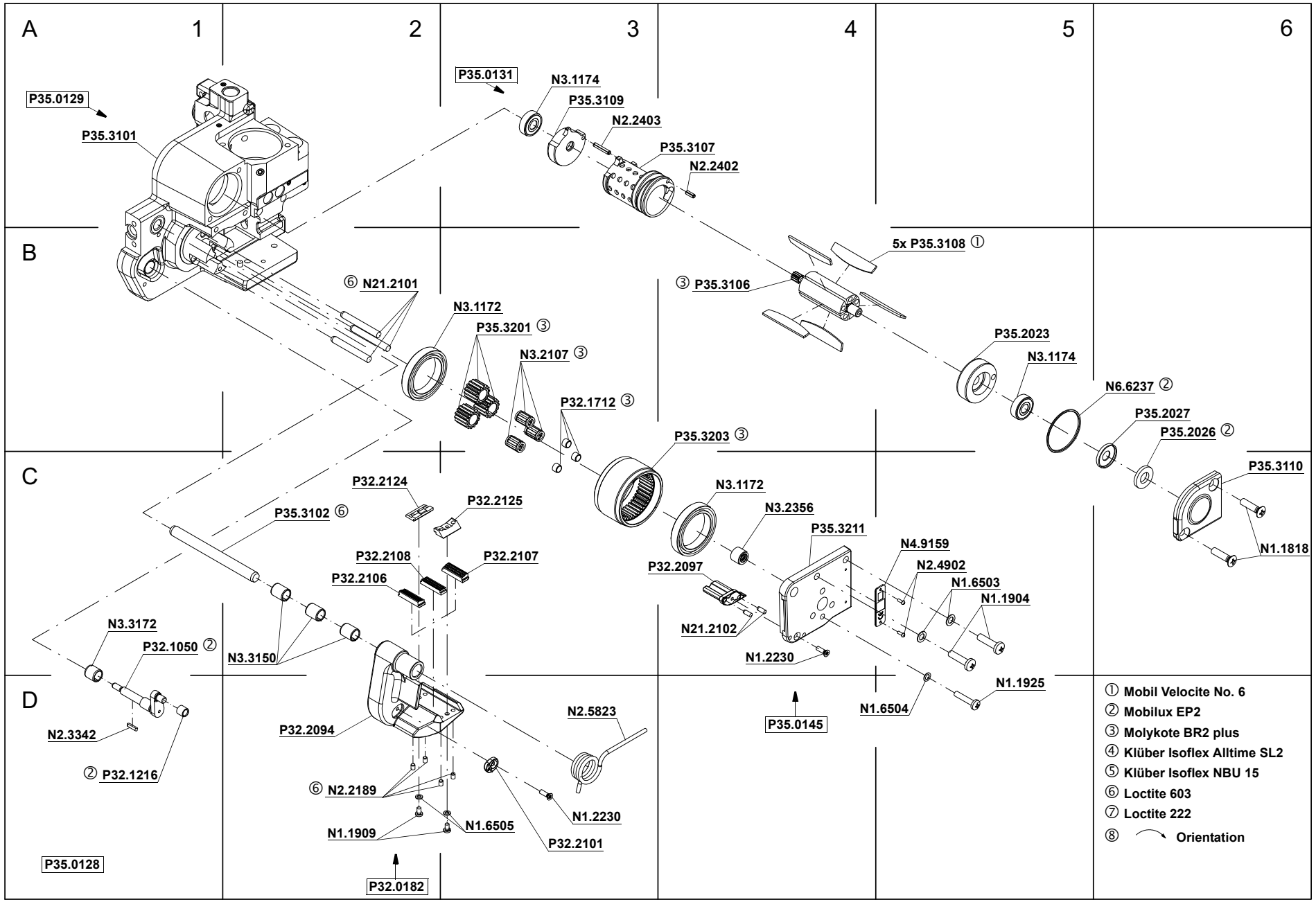
A
1
2
3
4
5
6
B
C
D
P35.0129
P35.3101
P35.0131
N3.1174
P35.3109
N2.2403
P35.3107
N2.2402
5x P35.3108 ①
③ P35.3106
⑥ N21.2101
N3.1172
P35.3201 ③
N3.2107 ③
P32.1712 ③
P35.3203 ③
P35.2023
N3.1174
N6.6237 ②
P35.2027
P35.2026 ②
P35.3110
N1.1818
P32.2124
P32.2125
P35.3102 ⑥
P32.2108
P32.2107
P32.2106
N3.1172
N3.2356
P35.3211
N4.9159
N2.4902
N1.6503
N1.1904
P32.2097
N21.2102
N1.2230
N1.1925
N1.6504
P35.0145
N3.3172
P32.1050 ②
N3.3150
N2.3342
② P32.1216
P32.2094
N2.5823
⑥ N2.2189
N1.2230
N1.1909
N1.6505
P32.2101
P35.0128
P32.0182
① Mobil Velocite No. 6
② Mobilux EP2
③ Molykote BR2 plus
④ Klüber Isoflex Alltime SL2
⑤ Klüber Isoflex NBU 15
⑥ Loctite 603
⑦ Loctite 222
⑧ Orientation

FROMM

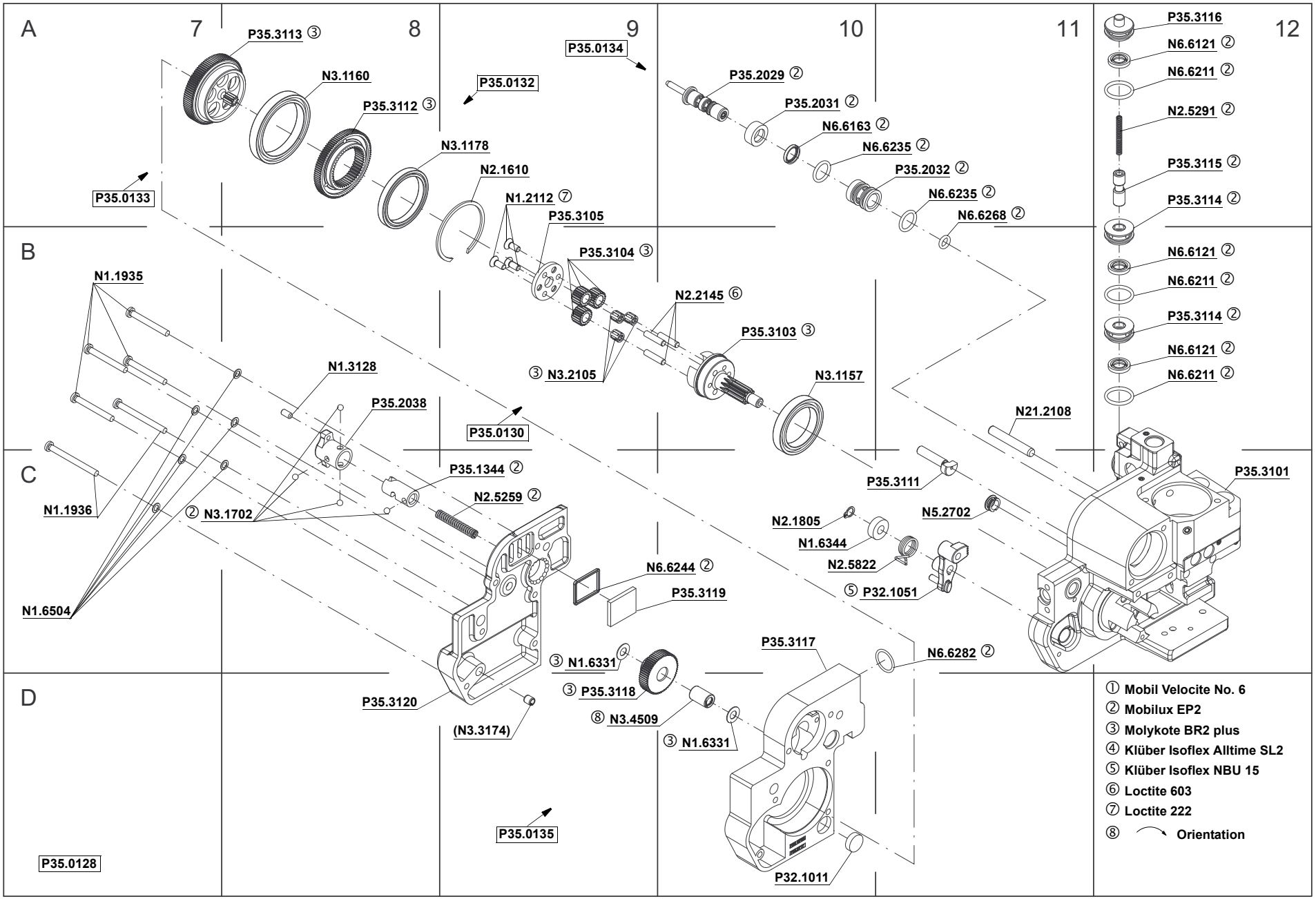
A
B
C
D
7
8
9
10
11
12
P35.3113 ③
N3.1160
P35.3112 ③
N3.1178
N2.1610
N1.2112 ⑦
P35.3105
P35.3104 ③
P35.0133
P35.0132
P35.0134
P35.2029 ②
P35.2031 ②
N6.6163 ②
N6.6235 ②
P35.2032 ②
N6.6235 ②
N6.6268 ②
P35.3116
N6.6121 ②
N6.6211 ②
N2.5291 ②
P35.3115 ②
P35.3114 ②
N6.6121 ②
N6.6211 ②
P35.3114 ②
N6.6121 ②
N6.6211 ②
N1.1935
N1.3128
P35.2038
N2.2145 ⑥
P35.3103 ③
③ N3.2105
N3.1157
P35.0130
N21.2108
P35.3111
P35.3101
P35.1344 ②
N2.5259 ②
N1.1936
② N3.1702
N2.1805
N1.6344
N2.5822
N5.2702
⑤ P32.1051
N6.6244 ②
P35.3119
N1.6504
P35.3117
N6.6282 ②
③ N1.6331
③ P35.3118
⑧ N3.4509
③ N1.6331
P35.3120
(N3.3174)
P35.0135
P32.1011
P35.0128
① Mobil Velocite No. 6
② Mobilux EP2
③ Molykote BR2 plus
④ Klüber Isoflex Alltime SL2
⑤ Klüber Isoflex NBU 15
⑥ Loctite 603
⑦ Loctite 222
⑧ Orientation

FROMM

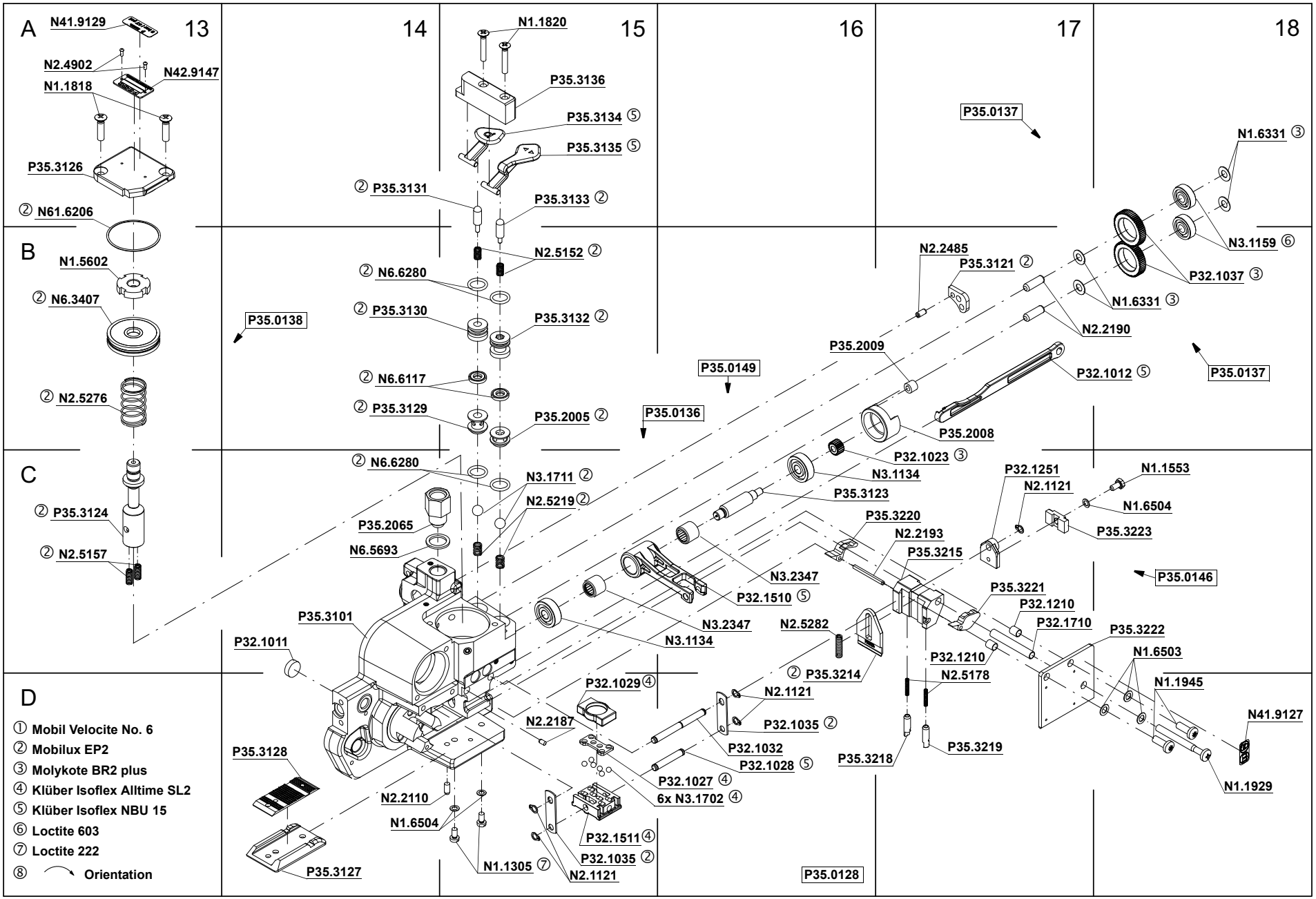
A
B
C
D
13
14
15
16
17
18
N41.9129
N2.4902
N42.9147
N1.1818
P35.3126
② N61.6206
N1.5602
② N6.3407
② N2.5276
② P35.3124
② N2.5157
N1.1820
P35.3136
P35.3134 ⑤
P35.3135 ⑤
② P35.3131
P35.3133 ②
N2.5152 ②
② N6.6280
② P35.3130
P35.3132 ②
② N6.6117
② P35.3129
P35.2005 ②
② N6.6280
N3.1711 ②
N2.5219 ②
P35.2065
N6.5693
P35.0138
P35.0149
P35.0136
P35.0137
P35.0146
P35.0128
N1.6331 ③
N3.1159 ⑥
P32.1037 ③
N1.6331 ③
N2.2190
N2.2485
P35.3121 ②
P35.2009
P32.1012 ⑤
P35.2008
P32.1023 ③
N3.1134
P35.3123
P35.3220
N2.2193
P35.3215
N3.2347
P32.1510 ⑤
N3.2347
N3.1134
N2.5282
② P35.3214
P32.1251
N2.1121
N1.1553
N1.6504
P35.3223
P35.3221
P32.1210
P32.1710
P35.3222
P32.1210
N2.5178
N1.6503
N1.1945
N41.9127
N1.1929
P35.3218
P35.3219
P35.3101
P32.1011
P32.1029 ④
N2.2187
N2.1121
P32.1035 ②
P32.1032
P32.1028 ⑤
P32.1027 ④
6x N3.1702 ④
P35.3128
N2.2110
N1.6504
P32.1511 ④
P32.1035 ②
N2.1121
N1.1305 ⑦
P35.3127
① Mobil Velocite No. 6
② Mobilux EP2
③ Molykote BR2 plus
④ Klüber Isoflex Alltime SL2
⑤ Klüber Isoflex NBU 15
⑥ Loctite 603
⑦ Loctite 222
⑧ Orientation

FROMM

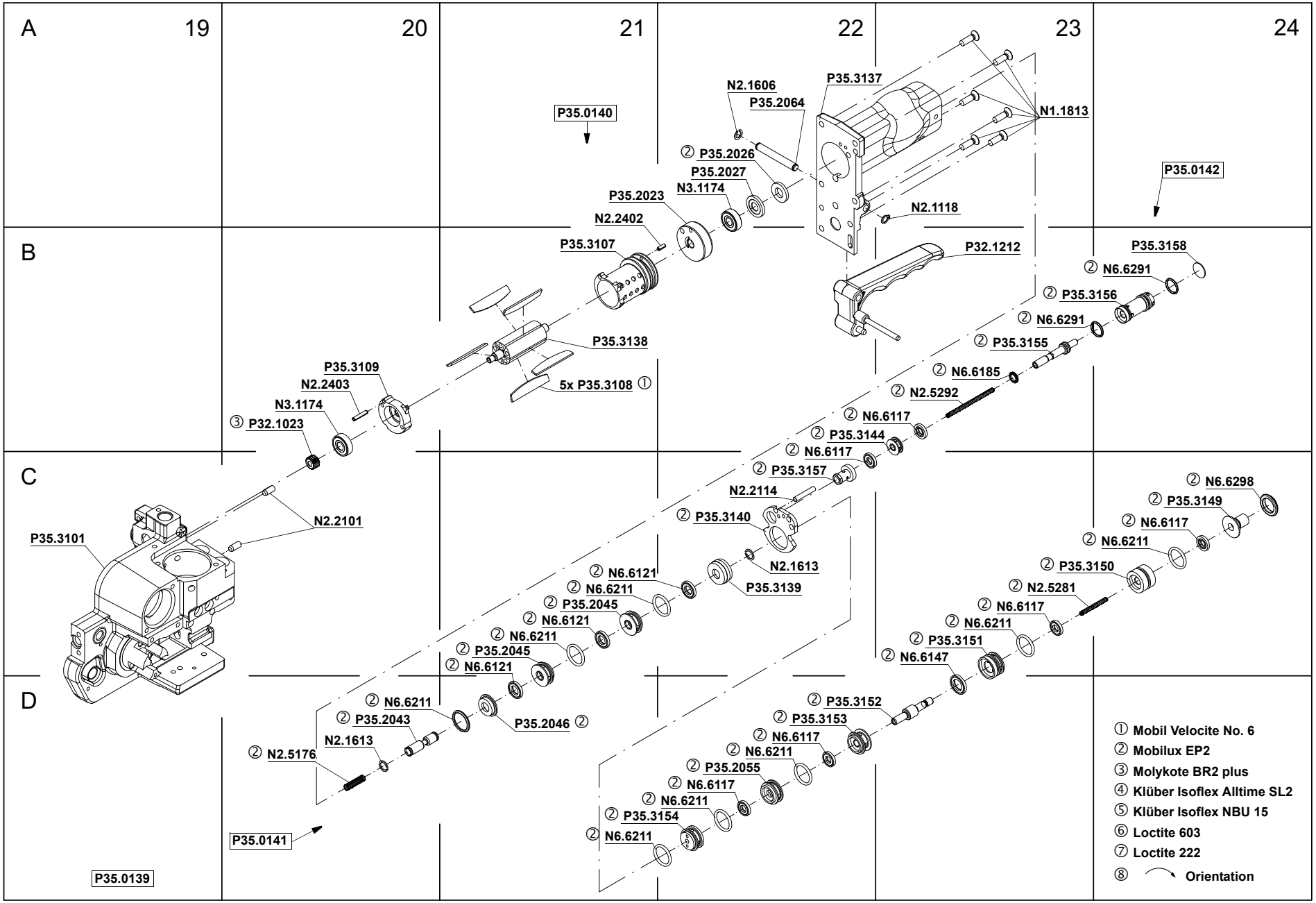
A
19
20
21
22
23
24
B
C
D
P35.0140
P35.0142
P35.0141
P35.0139
N2.1606
P35.2064
P35.3137
N1.1813
② P35.2026
P35.2027
N3.1174
P35.2023
N2.2402
N2.1118
P35.3107
P32.1212
P35.3158
② N6.6291
② P35.3156
② N6.6291
② P35.3155
P35.3138
P35.3109
N2.2403
5x P35.3108 ①
② N6.6185
② N2.5292
N3.1174
③ P32.1023
② N6.6117
② P35.3144
② N6.6117
② P35.3157
N2.2114
② P35.3140
P35.3101
N2.2101
② N6.6298
② P35.3149
② N6.6117
② N6.6211
② P35.3150
N2.1613
② N6.6121
P35.3139
② N6.6211
② N2.5281
② P35.2045
② N6.6117
② N6.6121
② N6.6211
② N6.6211
② P35.3151
② P35.2045
② N6.6147
② N6.6121
② N6.6211
② P35.3152
② P35.2043
P35.2046 ②
② P35.3153
N2.1613
② N6.6117
② N2.5176
② N6.6211
② P35.2055
② N6.6117
② N6.6211
② P35.3154
② N6.6211
① Mobil Velocite No. 6
② Mobilux EP2
③ Molykote BR2 plus
④ Klüber Isoflex Alltime SL2
⑤ Klüber Isoflex NBU 15
⑥ Loctite 603
⑦ Loctite 222
⑧ Orientation

FROMM

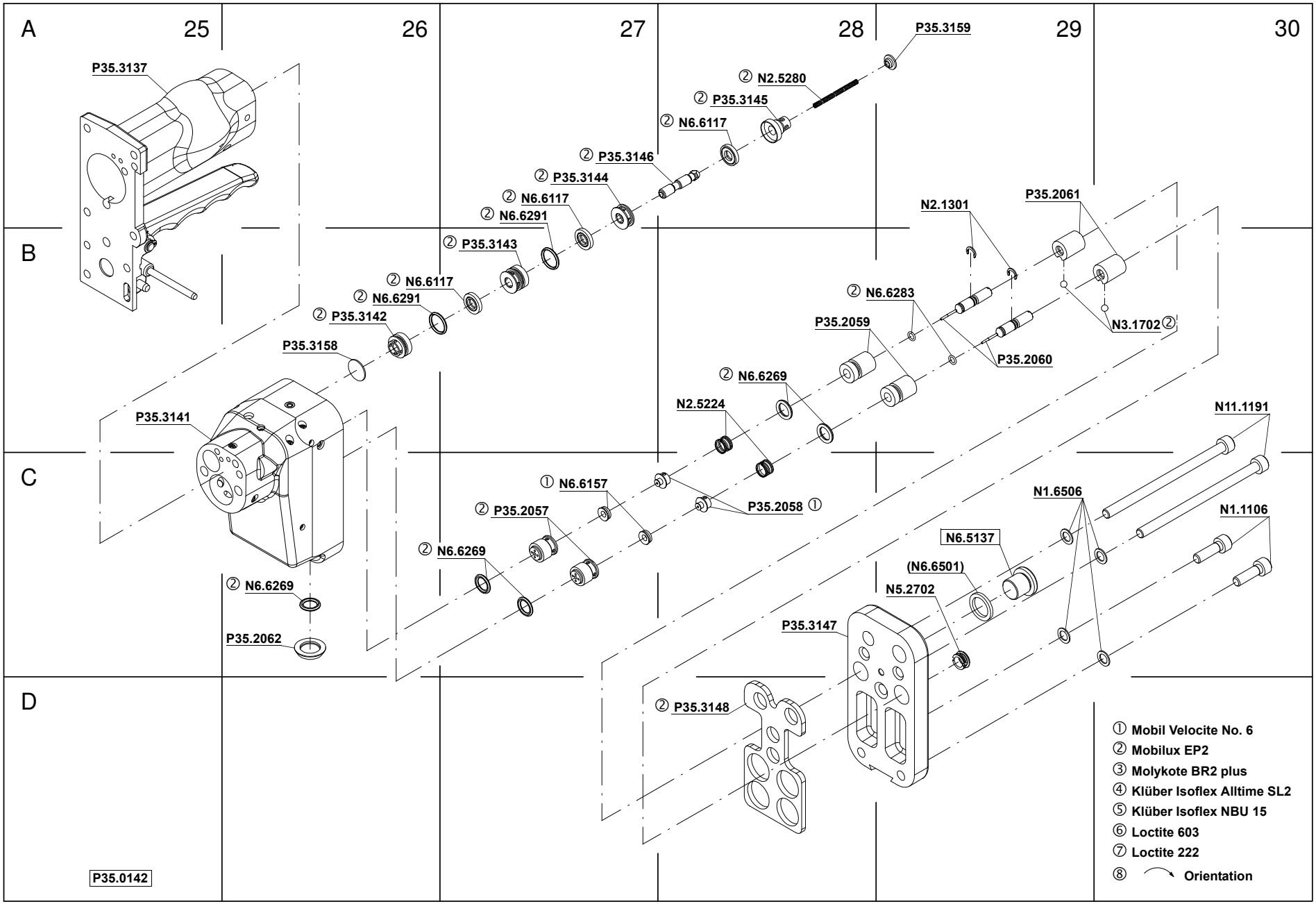
A
B
C
D
25
26
27
28
29
30
P35.3137
P35.3159
② N2.5280
② P35.3145
② N6.6117
② P35.3146
② P35.3144
② N6.6117
② N6.6291
② P35.3143
② N6.6117
② N6.6291
② P35.3142
P35.3158
P35.3141
② N6.6269
P35.2062
N2.1301
P35.2061
② N6.6283
P35.2059
N3.1702 ②
P35.2060
② N6.6269
N2.5224
N11.1191
① N6.6157
P35.2058 ①
② P35.2057
② N6.6269
N1.6506
N1.1106
N6.5137
(N6.6501)
N5.2702
P35.3147
② P35.3148
P35.0142
① Mobil Velocite No. 6
② Mobilux EP2
③ Molykote BR2 plus
④ Klüber Isoflex Alltime SL2
⑤ Klüber Isoflex NBU 15
⑥ Loctite 603
⑦ Loctite 222
⑧ Orientation

FROMM