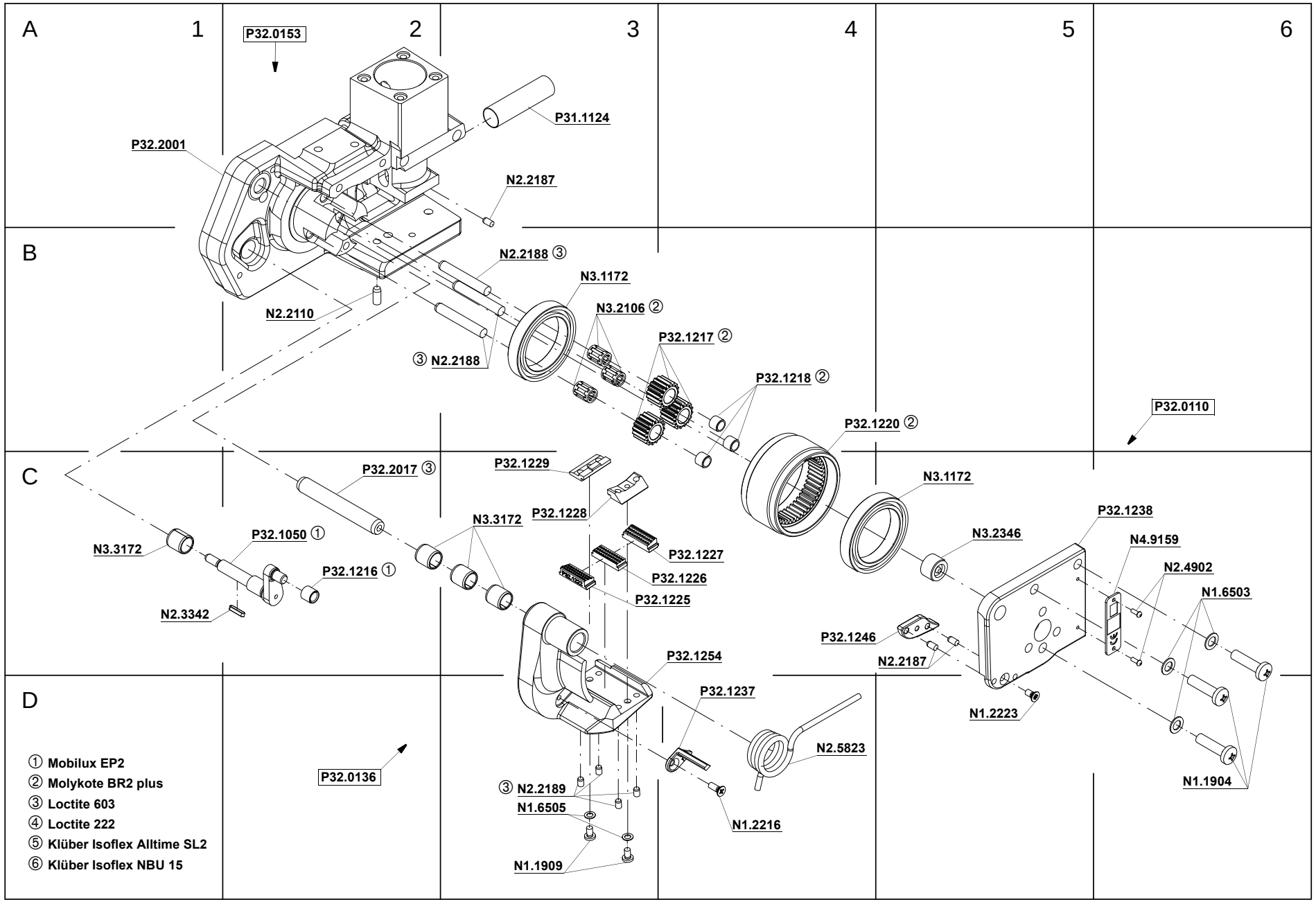
A
1
2
3
4
5
6
B
C
D
P32.0153
P31.1124
P32.2001
N2.2187
N2.2188 ③
N3.1172
N3.2106 ②
N2.2110
P32.1217 ②
③ N2.2188
P32.1218 ②
P32.0110
P32.1220 ②
P32.2017 ③
P32.1229
N3.1172
P32.1228
P32.1238
N3.3172
P32.1050 ①
N3.2346
N4.9159
N3.3172
P32.1227
N2.4902
P32.1216 ①
P32.1226
N1.6503
P32.1225
N2.3342
P32.1246
P32.1254
N2.2187
P32.1237
N1.2223
N2.5823
P32.0136
③ N2.2189
N1.1904
N1.6505
N1.2216
N1.1909
① Mobilux EP2
② Molykote BR2 plus
③ Loctite 603
④ Loctite 222
⑤ Klüber Isoflex Alltime SL2
⑥ Klüber Isoflex NBU 15

FROMM

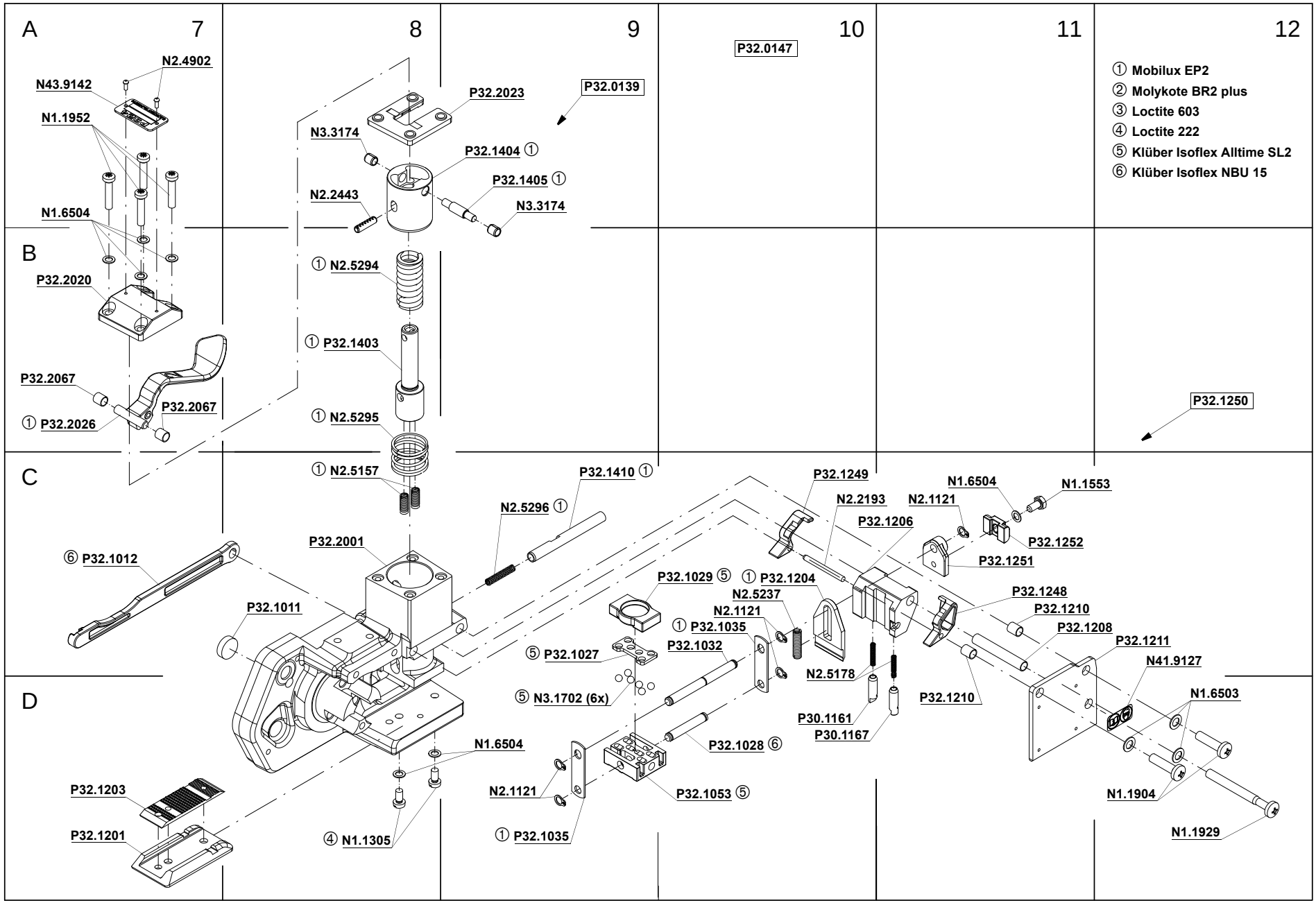
A
7
8
9
10
11
12
B
C
D
P32.0147
P32.0139
P32.1250
① Mobilux EP2
② Molykote BR2 plus
③ Loctite 603
④ Loctite 222
⑤ Klüber Isoflex Alltime SL2
⑥ Klüber Isoflex NBU 15
N2.4902
N43.9142
N1.1952
N1.6504
P32.2020
P32.2067
P32.2067
① P32.2026
P32.2023
N3.3174
P32.1404 ①
P32.1405 ①
N2.2443
N3.3174
① N2.5294
① P32.1403
① N2.5295
① N2.5157
P32.1410 ①
N2.5296 ①
P32.2001
⑥ P32.1012
P32.1011
P32.1029 ⑤
⑤ P32.1027
⑤ N3.1702 (6x)
P32.1032
① P32.1035
N2.1121
N2.5237
① P32.1204
N2.5178
P30.1161
P30.1167
P32.1028 ⑥
P32.1053 ⑤
N2.1121
① P32.1035
N1.6504
④ N1.1305
P32.1203
P32.1201
P32.1249
N2.2193
P32.1206
N2.1121
N1.6504
N1.1553
P32.1252
P32.1251
P32.1248
P32.1210
P32.1208
P32.1211
N41.9127
P32.1210
N1.6503
N1.1904
N1.1929

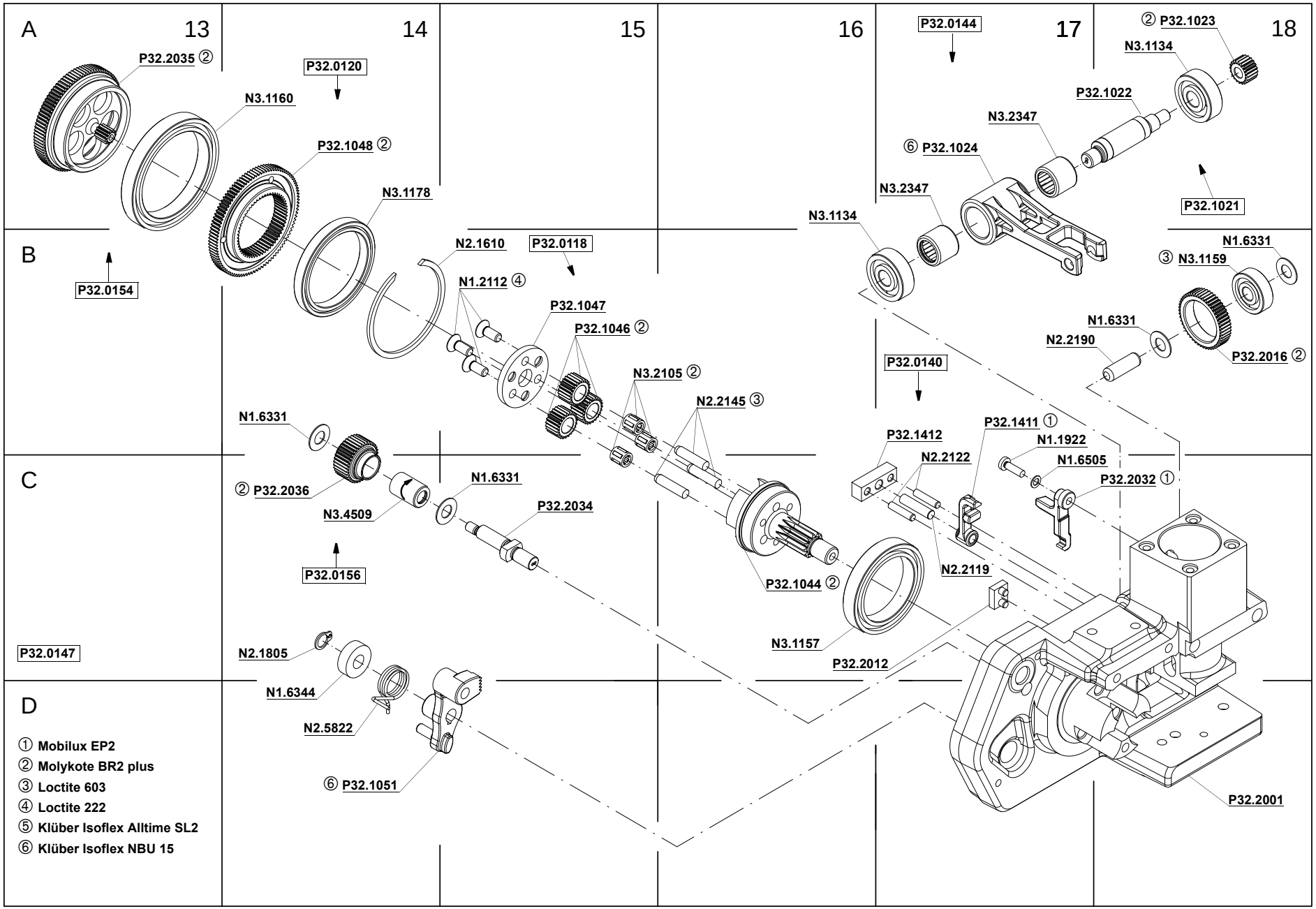
A
13
14
15
16
17
18
B
C
D
P32.2035 ②
N3.1160
P32.0120
P32.1048 ②
N3.1178
P32.0154
N2.1610
P32.0118
N1.2112 ④
P32.1047
P32.1046 ②
N3.2105 ②
N2.2145 ③
N1.6331
② P32.2036
N3.4509
N1.6331
P32.2034
P32.0156
P32.0147
N2.1805
N1.6344
N2.5822
⑥ P32.1051
P32.0144
② P32.1023
N3.1134
P32.1022
N3.2347
⑥ P32.1024
N3.2347
N3.1134
P32.1021
N1.6331
③ N3.1159
N1.6331
N2.2190
P32.2016 ②
P32.0140
P32.1412
P32.1411 ①
N1.1922
N2.2122
N1.6505
P32.2032 ①
N2.2119
P32.1044 ②
N3.1157
P32.2012
P32.2001
① Mobilux EP2
② Molykote BR2 plus
③ Loctite 603
④ Loctite 222
⑤ Klüber Isoflex Alltime SL2
⑥ Klüber Isoflex NBU 15

FROMM

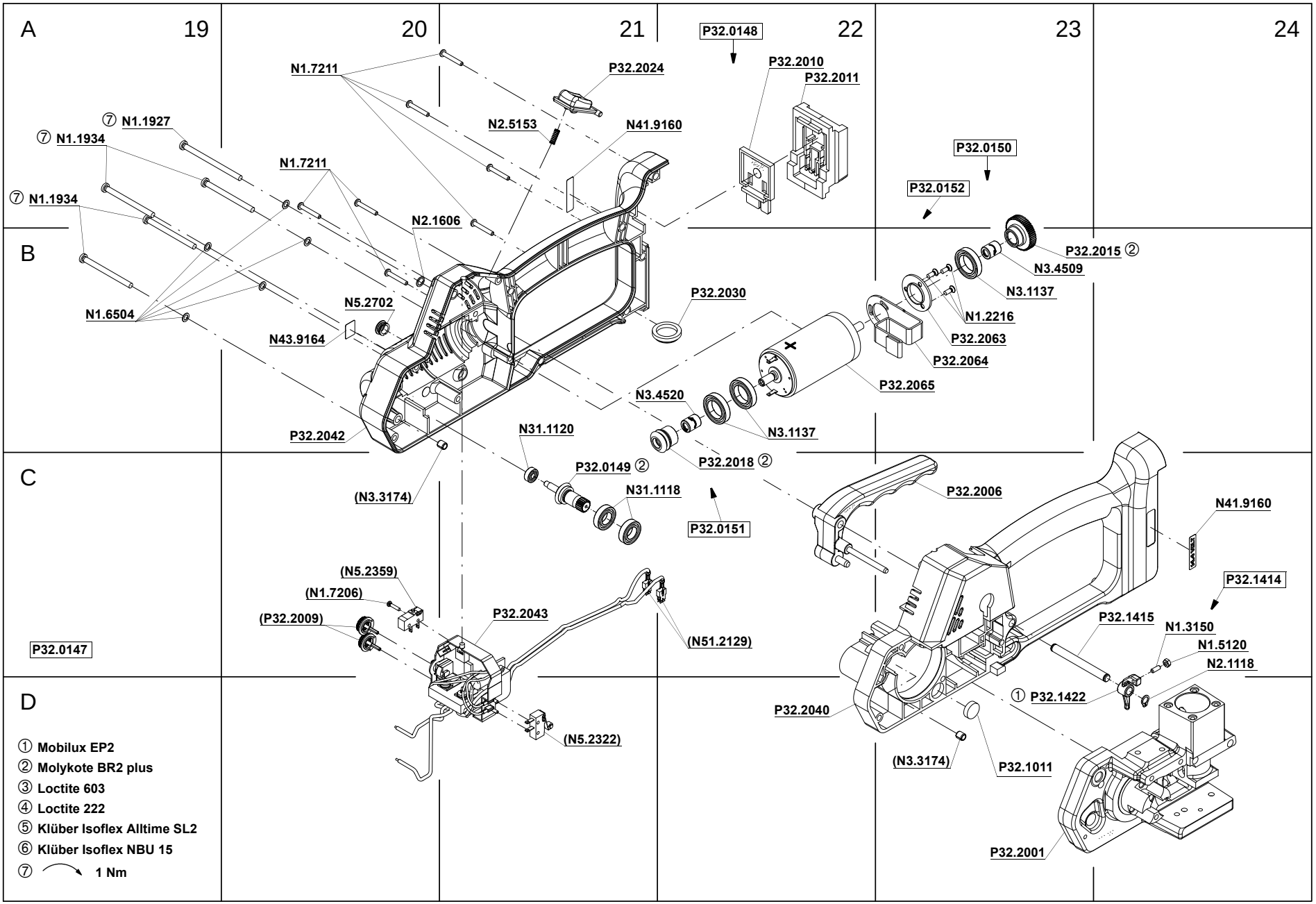
A
19
20
21
22
23
24
B
C
D
N1.7211
P32.2024
P32.0148
P32.2010
P32.2011
⑦ N1.1927
⑦ N1.1934
N2.5153
N41.9160
N1.7211
P32.0150
P32.0152
⑦ N1.1934
N2.1606
P32.2015 ②
N3.4509
N3.1137
N1.6504
N5.2702
P32.2030
N1.2216
N43.9164
P32.2063
P32.2064
P32.2065
N3.4520
N3.1137
P32.2042
N31.1120
P32.2018 ②
P32.0149 ②
(N3.3174)
N31.1118
P32.0151
P32.2006
N41.9160
(N5.2359)
(N1.7206)
P32.1414
(P32.2009)
P32.2043
P32.1415
N1.3150
(N51.2129)
N1.5120
P32.0147
N2.1118
① P32.1422
P32.2040
(N5.2322)
(N3.3174)
P32.1011
P32.2001
① Mobilux EP2
② Molykote BR2 plus
③ Loctite 603
④ Loctite 222
⑤ Klüber Isoflex Alltime SL2
⑥ Klüber Isoflex NBU 15
⑦ 1 Nm

FROMM