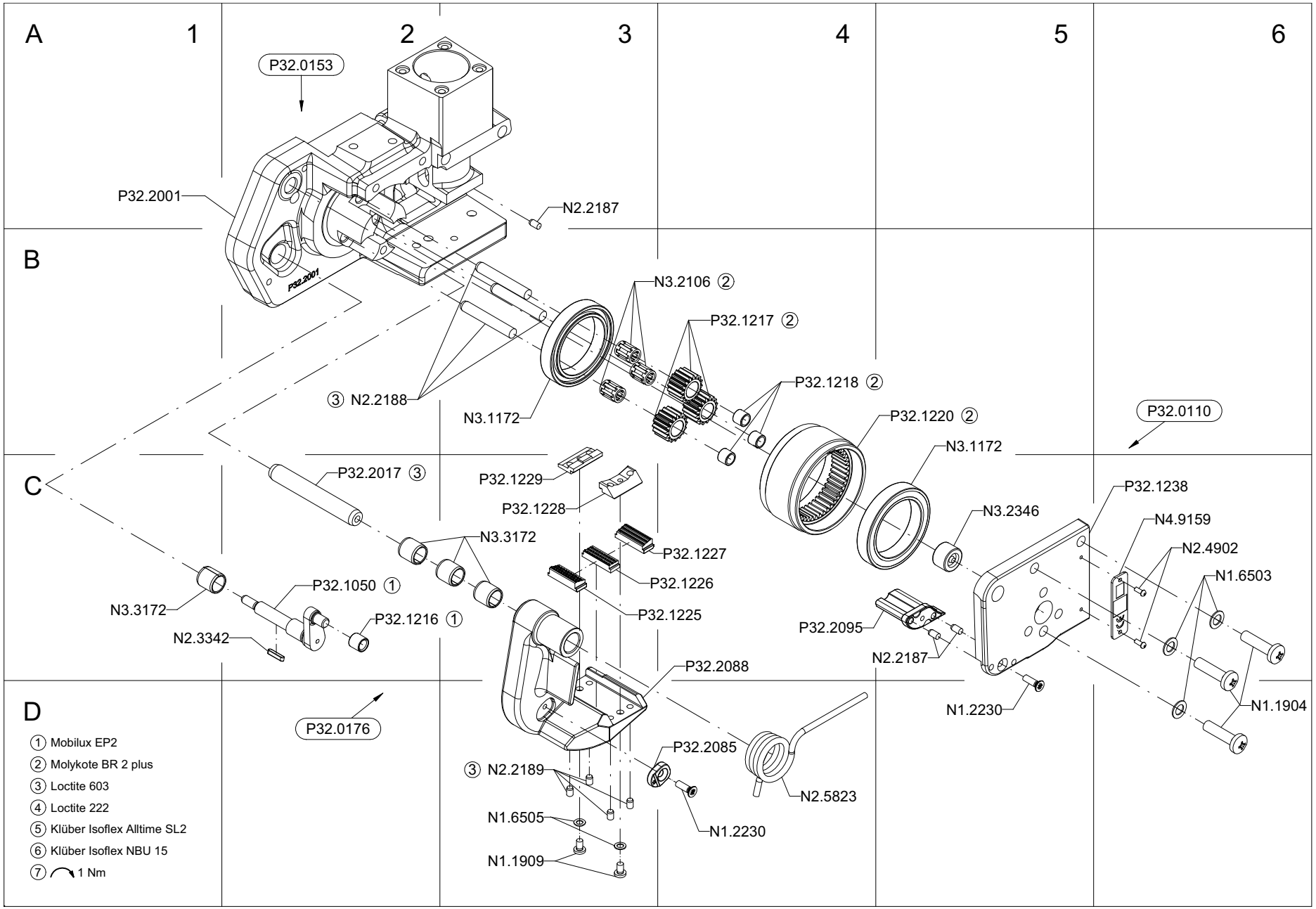
A
1
2
3
4
5
6
B
C
D
P32.0153
P32.2001
N2.2187
N3.2106 ②
P32.1217 ②
P32.1218 ②
③ N2.2188
N3.1172
P32.1220 ②
N3.1172
P32.0110
P32.2017 ③
P32.1229
P32.1228
P32.1238
N3.2346
N4.9159
N3.3172
P32.1227
N2.4902
P32.1226
N1.6503
P32.1050 ①
N3.3172
P32.1216 ①
P32.1225
N2.3342
P32.2095
N2.2187
P32.2088
N1.2230
N1.1904
P32.0176
P32.2085
③ N2.2189
N2.5823
N1.6505
N1.2230
N1.1909
① Mobilux EP2
② Molykote BR 2 plus
③ Loctite 603
④ Loctite 222
⑤ Klüber Isoflex Alltime SL2
⑥ Klüber Isoflex NBU 15
⑦ 1 Nm

FROMM

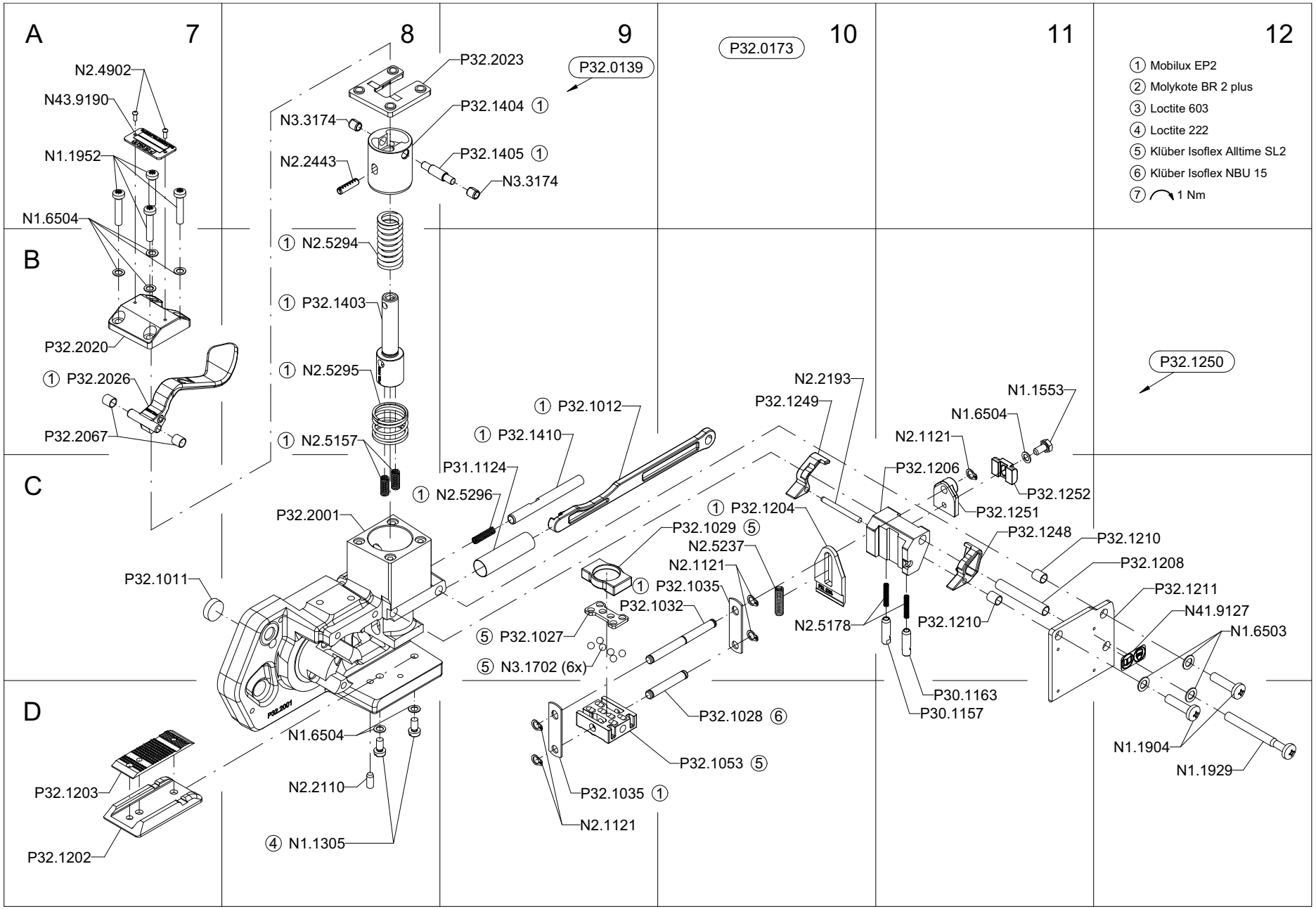
A
B
C
D
7
8
9
10
11
12
P32.0139
P32.0173
P32.1250
① Mobilux EP2
② Molykote BR 2 plus
③ Loctite 603
④ Loctite 222
⑤ Klüber Isoflex Alltime SL2
⑥ Klüber Isoflex NBU 15
⑦ 1 Nm
N2.4902
N43.9190
N1.1952
N1.6504
P32.2020
① P32.2026
P32.2067
P32.2023
P32.1404 ①
N3.3174
N2.2443
P32.1405 ①
N3.3174
① N2.5294
① P32.1403
① N2.5295
① N2.5157
P32.2001
P32.1011
① P32.1012
① P32.1410
P31.1124
① N2.5296
P32.1029 ⑤
N2.5237
N2.1121
① P32.1035
P32.1032
⑤ P32.1027
⑤ N3.1702 (6x)
N2.2193
P32.1249
① P32.1204
N2.5178
P32.1210
P32.1028 ⑥
P32.1053 ⑤
P32.1035 ①
N2.1121
P30.1163
P30.1157
N1.1553
N1.6504
N2.1121
P32.1206
P32.1252
P32.1251
P32.1248
P32.1210
P32.1208
P32.1211
N41.9127
N1.6503
N1.1904
N1.1929
N1.6504
N2.2110
④ N1.1305
P32.1203
P32.1202

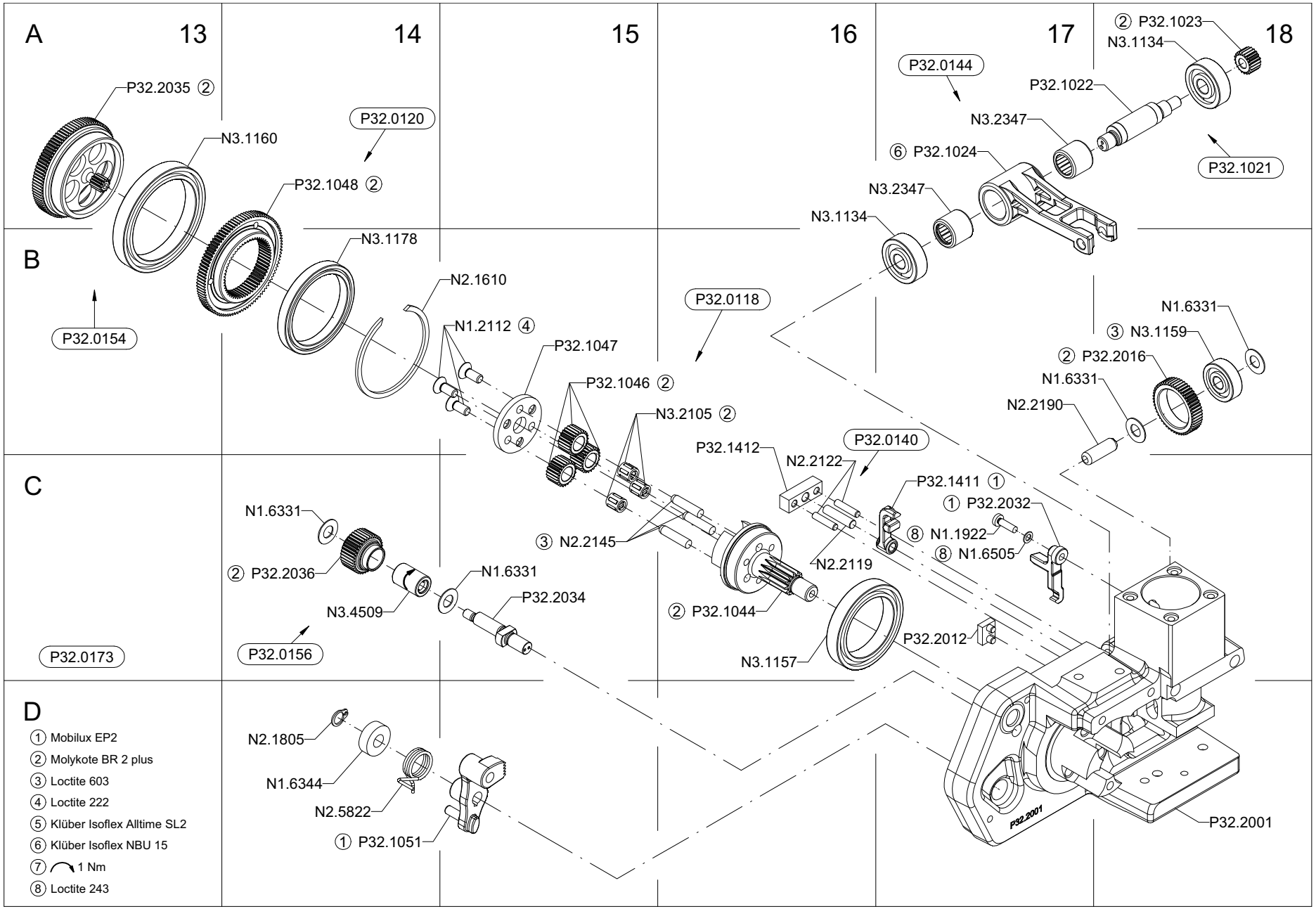
A
13
14
15
16
17
18
B
C
D
P32.2035 ②
N3.1160
P32.0120
P32.1048 ②
N3.1178
N2.1610
N1.2112 ④
P32.0154
P32.1047
P32.0118
P32.1046 ②
N3.2105 ②
P32.1412
N2.2122
P32.0140
③ N2.2145
N2.2119
② P32.1044
N3.1157
P32.1411 ①
① P32.2032
⑧ N1.1922
⑧ N1.6505
P32.2012
N1.6331
② P32.2036
N3.4509
N1.6331
P32.2034
P32.0156
P32.0173
N2.1805
N1.6344
N2.5822
① P32.1051
P32.0144
② P32.1023
N3.1134
P32.1022
N3.2347
⑥ P32.1024
P32.1021
N3.2347
N3.1134
N1.6331
③ N3.1159
② P32.2016
N1.6331
N2.2190
P32.2001
① Mobilux EP2
② Molykote BR 2 plus
③ Loctite 603
④ Loctite 222
⑤ Klüber Isoflex Alltime SL2
⑥ Klüber Isoflex NBU 15
⑦ 1 Nm
⑧ Loctite 243

FROMM

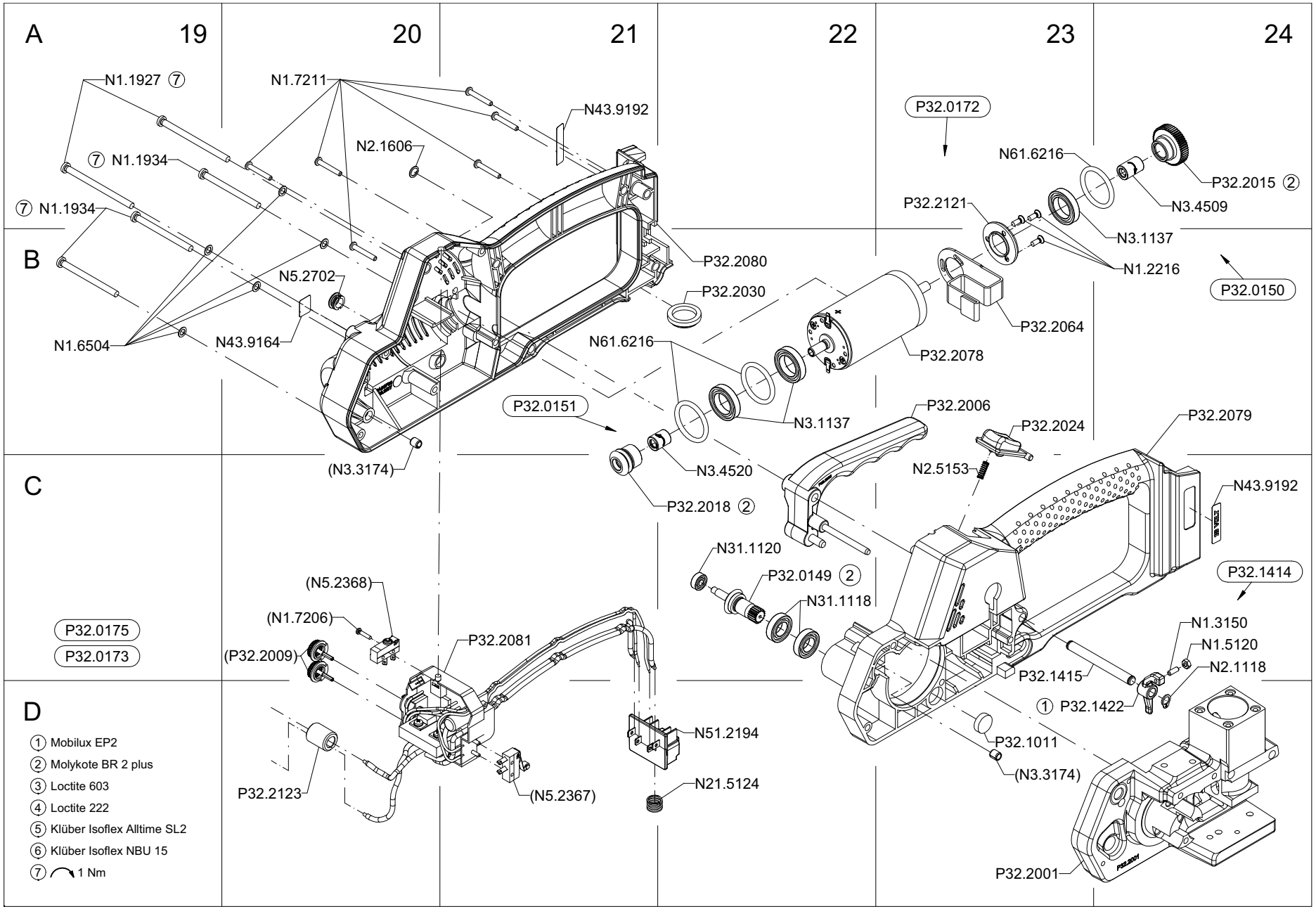
A
19
20
21
22
23
24
B
C
D
N1.1927 ⑦
⑦ N1.1934
⑦ N1.1934
N1.6504
N5.2702
N43.9164
N1.7211
N2.1606
N43.9192
(N3.3174)
P32.2080
P32.2030
N61.6216
P32.0151
N3.1137
N3.4520
P32.2018 ②
P32.0172
N61.6216
P32.2015 ②
N3.4509
P32.2121
N3.1137
N1.2216
P32.0150
P32.2064
P32.2078
P32.2006
P32.2024
P32.2079
N2.5153
N43.9192
N31.1120
P32.0149 ②
N31.1118
P32.1414
N1.3150
N1.5120
N2.1118
P32.1415
① P32.1422
P32.1011
(N3.3174)
P32.2001
P32.0175
P32.0173
(N5.2368)
(N1.7206)
(P32.2009)
P32.2081
P32.2123
(N5.2367)
N51.2194
N21.5124
① Mobilux EP2
② Molykote BR 2 plus
③ Loctite 603
④ Loctite 222
⑤ Klüber Isoflex Alltime SL2
⑥ Klüber Isoflex NBU 15
⑦ 1 Nm