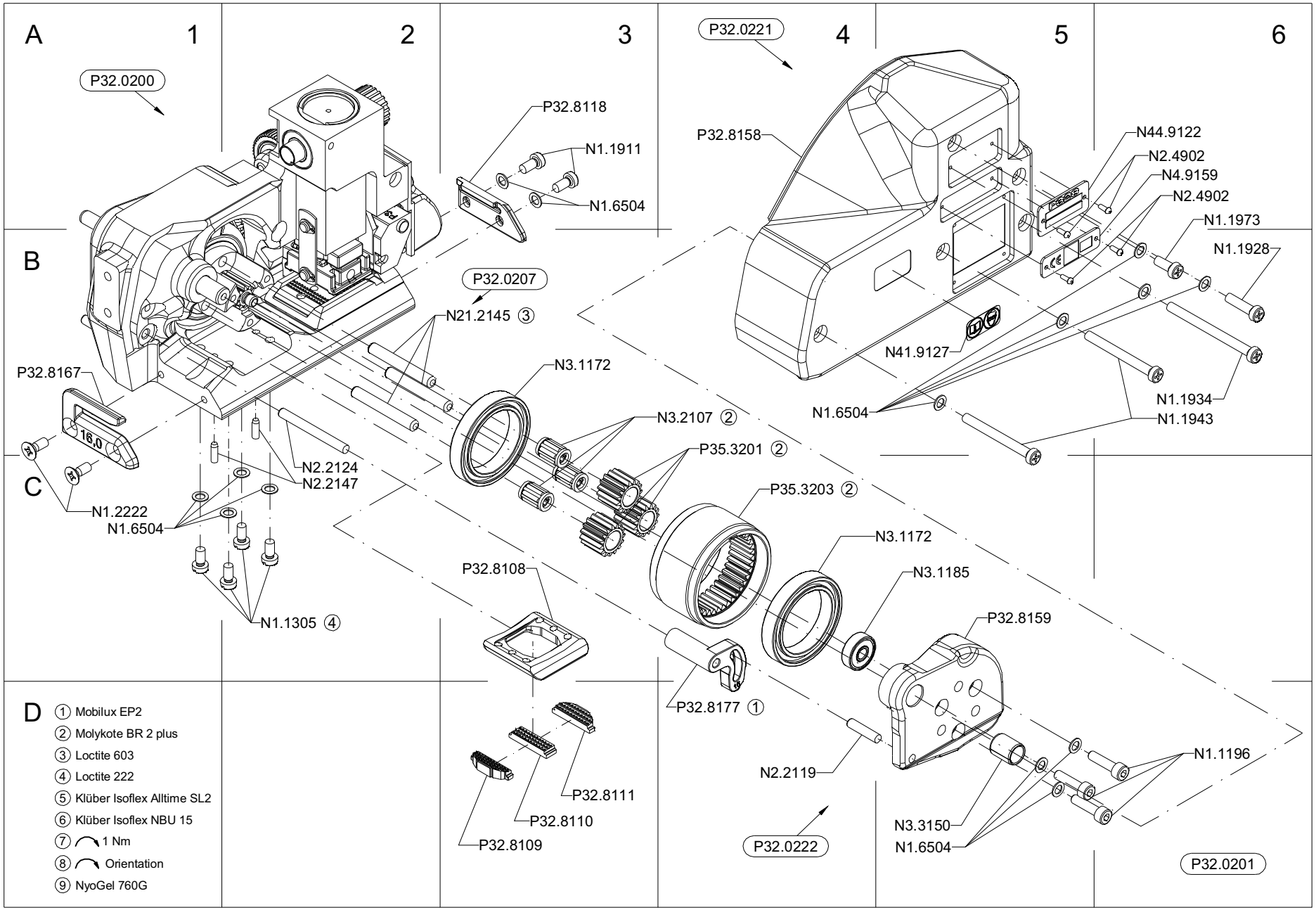
A
1
2
3
4
5
6
B
C
D
P32.0200
P32.0207
P32.0221
P32.0222
P32.0201
P32.8118
N1.1911
N1.6504
P32.8158
N44.9122
N2.4902
N4.9159
N2.4902
N1.1973
N1.1928
N21.2145 ③
N41.9127
N3.1172
P32.8167
16,0
N3.2107 ②
N1.6504
N1.1934
N1.1943
P35.3201 ②
N2.2124
N2.2147
P35.3203 ②
N1.2222
N1.6504
N3.1172
P32.8108
N3.1185
P32.8159
N1.1305 ④
P32.8177 ①
N2.2119
N1.1196
P32.8111
P32.8110
P32.8109
N3.3150
N1.6504
① Mobilux EP2
② Molykote BR 2 plus
③ Loctite 603
④ Loctite 222
⑤ Klüber Isoflex Alltime SL2
⑥ Klüber Isoflex NBU 15
⑦ 1 Nm
⑧ Orientation
⑨ NyoGel 760G

FROMM

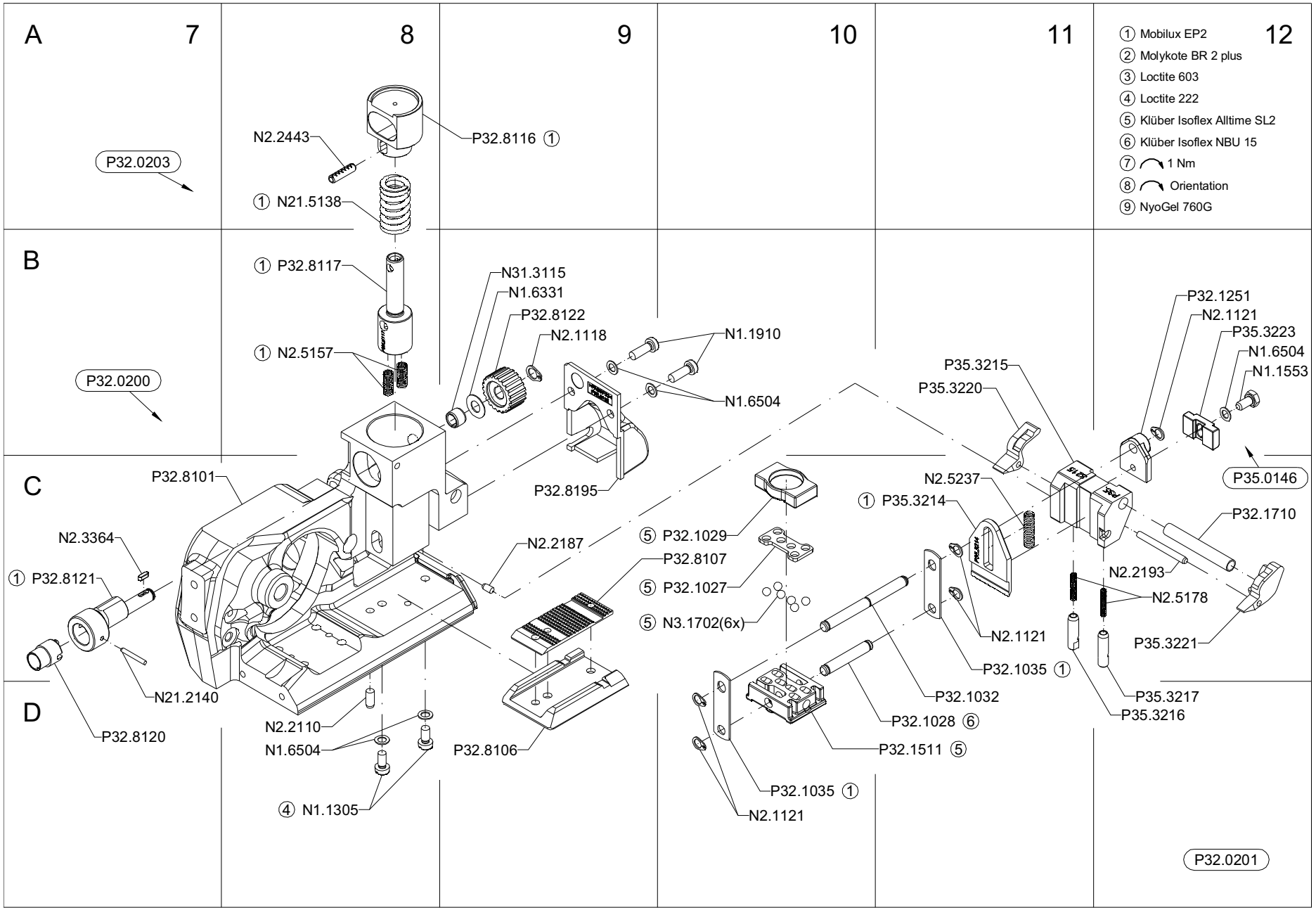
A
B
C
D
7
8
9
10
11
12
① Mobilux EP2
② Molykote BR 2 plus
③ Loctite 603
④ Loctite 222
⑤ Klüber Isoflex Alltime SL2
⑥ Klüber Isoflex NBU 15
⑦ 1 Nm
⑧ Orientation
⑨ NyoGel 760G
P32.0203
N2.2443
P32.8116 ①
① N21.5138
① P32.8117
N31.3115
N1.6331
P32.8122
N2.1118
N1.1910
① N2.5157
N1.6504
P32.0200
P32.8101
P32.8195
N2.3364
① P32.8121
N2.2187
⑤ P32.1029
P32.8107
⑤ P32.1027
⑤ N3.1702(6x)
N21.2140
P32.8120
N2.2110
N1.6504
P32.8106
④ N1.1305
P32.1251
N2.1121
P35.3223
N1.6504
N1.1553
P35.3215
P35.3220
P35.0146
N2.5237
① P35.3214
P32.1710
N2.2193
N2.5178
N2.1121
P35.3221
P32.1035 ①
P32.1032
P35.3217
P35.3216
P32.1028 ⑥
P32.1511 ⑤
P32.1035 ①
N2.1121
P32.0201

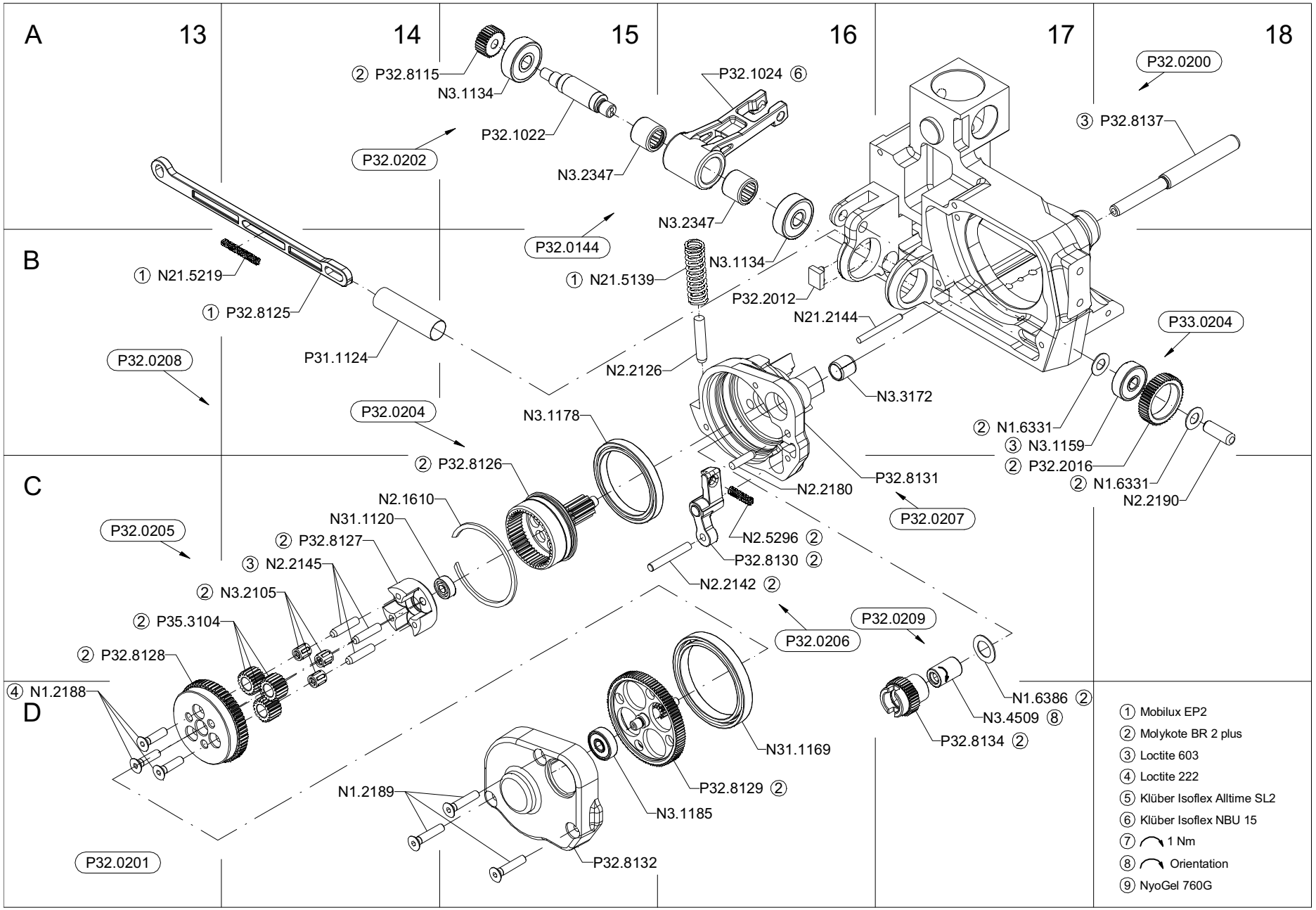
A
B
C
D
13
14
15
16
17
18
② P32.8115
N3.1134
P32.1022
P32.0202
N3.2347
P32.1024 ⑥
P32.0144
N3.2347
N3.1134
① N21.5139
P32.2012
N21.2144
P32.0200
③ P32.8137
P33.0204
② N1.6331
③ N3.1159
② P32.2016
② N1.6331
N2.2190
① N21.5219
① P32.8125
P31.1124
P32.0208
N2.2126
N3.3172
P32.0204
N3.1178
② P32.8126
N2.1610
N31.1120
② P32.8127
③ N2.2145
② N3.2105
② P35.3104
② P32.8128
④ N1.2188
P32.0205
N2.2180
P32.8131
P32.0207
N2.5296 ②
P32.8130 ②
N2.2142 ②
P32.0206
P32.0209
N1.6386 ②
N3.4509 ⑧
P32.8134 ②
N31.1169
P32.8129 ②
N3.1185
N1.2189
P32.8132
P32.0201
① Mobilux EP2
② Molykote BR 2 plus
③ Loctite 603
④ Loctite 222
⑤ Klüber Isoflex Alltime SL2
⑥ Klüber Isoflex NBU 15
⑦ 1 Nm
⑧ Orientation
⑨ NyoGel 760G

FROMM

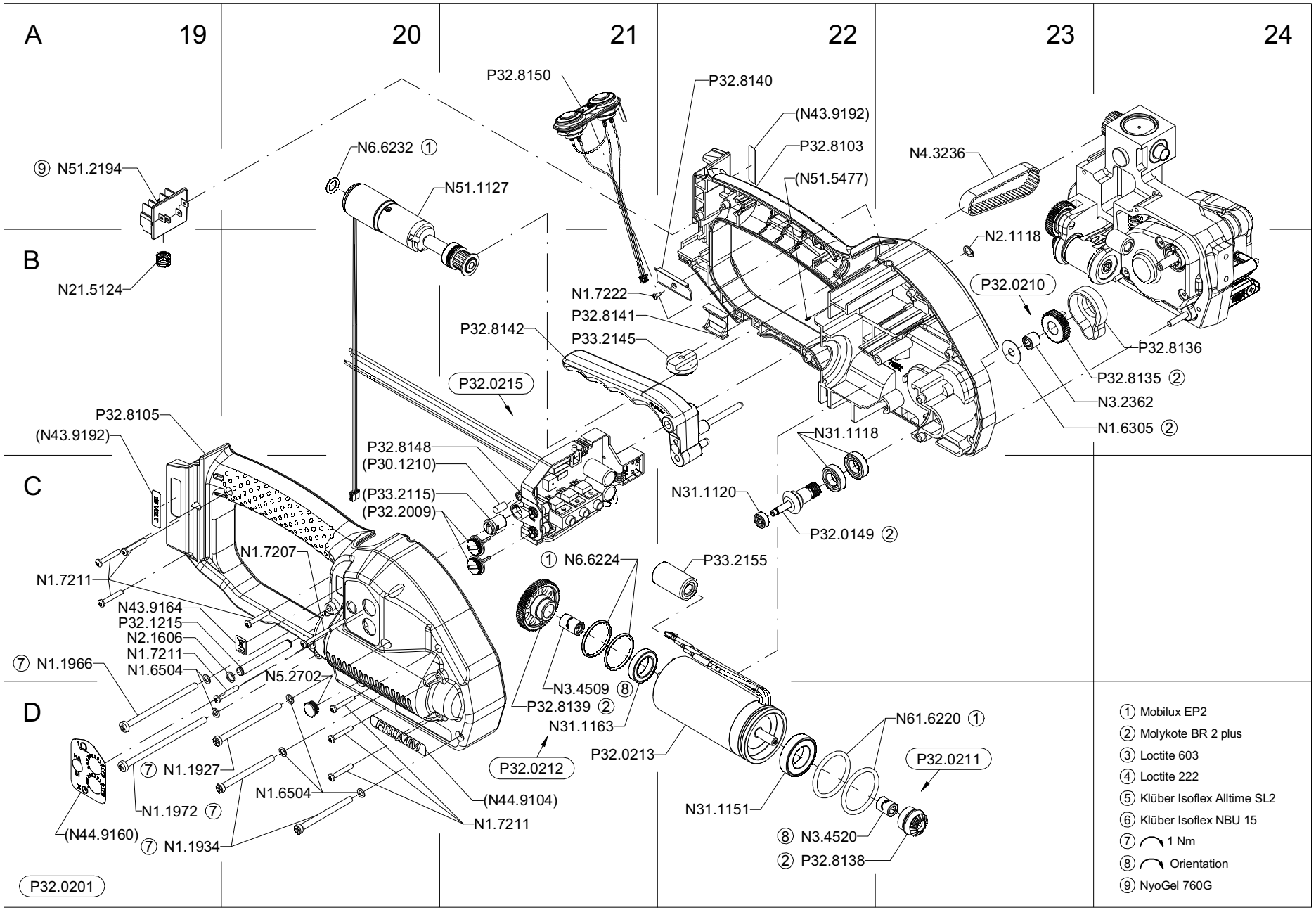
A
19
20
21
22
23
24
B
C
D
⑨ N51.2194
N21.5124
N6.6232 ①
N51.1127
P32.8150
P32.8140
(N43.9192)
P32.8103
(N51.5477)
N4.3236
N2.1118
P32.0210
N1.7222
P32.8141
P32.8142
P33.2145
P32.8136
P32.8135 ②
N3.2362
N1.6305 ②
P32.0215
P32.8105
(N43.9192)
P32.8148
(P30.1210)
(P33.2115)
(P32.2009)
N31.1118
N31.1120
P32.0149 ②
N1.7207
① N6.6224
P33.2155
N1.7211
N43.9164
P32.1215
N2.1606
N1.7211
N1.6504
⑦ N1.1966
N5.2702
N3.4509 ⑧
P32.8139 ②
N31.1163
P32.0212
P32.0213
N61.6220 ①
P32.0211
⑦ N1.1927
N1.6504
N1.1972 ⑦
(N44.9160)
⑦ N1.1934
(N44.9104)
N1.7211
N31.1151
⑧ N3.4520
② P32.8138
P32.0201
① Mobilux EP2
② Molykote BR 2 plus
③ Loctite 603
④ Loctite 222
⑤ Klüber Isoflex Alltime SL2
⑥ Klüber Isoflex NBU 15
⑦ 1 Nm
⑧ Orientation
⑨ NyoGel 760G